March/April 2006 www.BatteryPowerOnline.com Volume 10, Issue 2

BATTERY POWER PRODUCTS & TECHNOLOGY

Solutions for OEM Design Engineers, Integrators & Specifiers of Power Management Products

Using Dynamic Power Path Management To Achieve Proper Battery Charge Termination And Prevent False Safety Timer Warning

Jinrong Qian,
Texas Instruments

The lithium-ion (Li-Ion) battery is widely adopted in portable devices because of its high energy density on both a gravimetric and volumetric basis. Battery charging has become a critical area to focus on for maximizing battery capacity and achieving the highest safety. However, it can be irritating if the battery charger does not terminate charging properly or gives the end user a false warning signal while charging a Li-Ion battery. This article talks about the charge termination issue and false safety timer warning in commonly used battery charging and system power architecture. To solve these two problems, a dynamic power path management technique is presented and one example is provided to achieve proper charge termination and eliminate the false safety timer warning. It also allows operating the system while charging the deeply discharged battery simultaneously.

How to Properly Charge a Li-Ion Battery

Figure 1 shows a popular charge profile recommended for a Li-Ion battery. Most dedicated Li-Ion-charge integrated circuits (ICs) are designed to charge the battery in this manner. The charging of a Li-Ion battery consists of three phases: pre-charge, fast-charge constant current (CC) and constant voltage (CV) termination. In the pre-charge phase, the battery is charged at a low rate (typical of 1/10 the fast charge rate) when the battery cell voltage is below 3.0 V. This provides recovery of the passivating layer which might be dissolved after prolonged storage in the deep discharge state. It also prevents overheating at 1C charge when partial copper decomposition appears on anode-shorted cells on over-discharge. There is a pre-charge safety timer to prevent charging a dead battery in a long time period. When the battery cell voltage reaches 3.0 V, the charger enters the CC phase.

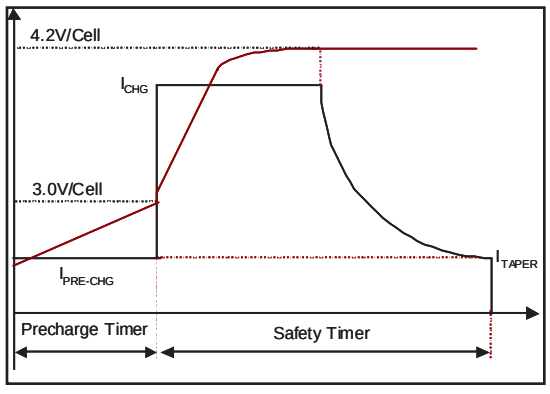

Figure 1. Li-Ion battery charge profile

Fast-charge current is usually limited from 0.5C to 1C rate to prevent overheating and resulting accelerated degradation. Rates should be selected so that the battery temperature does not exceed 45°C. The battery is charged at the fast-charge rate until the battery reaches a voltage regulation limit (typical of 4.2 V/cell for $LiCoO_2$ based cathode, 4.4V for the combined Li-Ni-Mn-Co chemical compound and $LiCoO_2$ based cathode battery). The charger starts to regulate the battery voltage and enters CV phase while the charge current exponentially drops to a pre-defined termination level, where the battery charger is terminated. A fast charge safety timer is usually required to prevent charging a dead battery for an excessively long period. The battery charger must be terminated if the battery does not reach the taper current when the safety time expires.

False Safety Timer Warning

Figure 2 shows the most commonly used battery charging and system power architecture. Either an AC adapter or a USB output is used as a power source to charge the battery. The output of the charger is first to charge the battery. In addition, the battery charge output provides power to the system since the system is directly connected to the battery, which makes this architecture simple and low-cost. However, connecting a system load to the battery can cause various issues such as charge termination and false safety timer warnings.

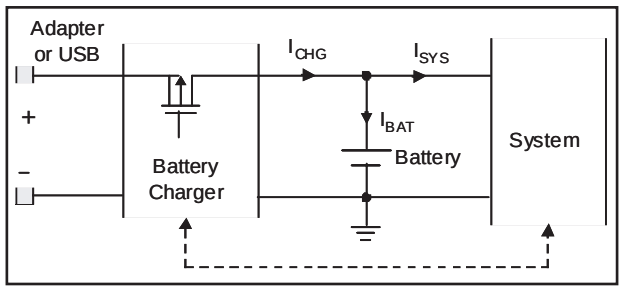

Figure 2. Battery charging and system power architecture block diagram

In this configuration, the charger output current I_{CHG} is not dedicated to charging the battery, but shared between the system and the battery. I_{CHG} is the current that the charger can control and the charger makes charging decision based on this current. Therefore, the charger is not able to directly monitor and control the effective battery charge current I_{BAT}.

The pre-charge phase, and when the pre-charge current is very small, is typically 10 percent of the fast-charging current when the battery cell voltage is less than 3.0 V. The system load I_{SYS} steals away some portion of this current and the effective current to charge the battery is even smaller. The battery voltage may not rise to 3 V within the pre-charge timer period and the timer would expire. This provides false safety timer warning only because there was not enough pre-charge current, not because there is something wrong with the battery. It's even possible that the system current is larger than the pre-charge current and the battery would be discharged instead of being charged.

In order to solve this issue, the system must be either in shutdown mode or low quiescent current standby mode so that the pre-charge current is dedicated to charging the battery to above 3.0 V within the pre-charge safety timer period. Therefore, the end user is not able to use the portable device during the battery pre-charge phase.

Similarly, once the battery enters the fast-charge phase, the system load still has to be considerably less than the charger output for the battery to charge in a timely manner. Otherwise, the fast-charge timer would expire and provide a false safety timer warning signal. The solution is to increase the safety timer value or increase charge current. Increasing charge current will increase the power dissipation for a linear battery charger. As a result, the battery charger may enter into thermal regulation mode to maintain the die temperature by reducing the charge current. Therefore, increasing the charge current may not be an effective way to prevent false safety timer warning. Since the effective charge current is unknown due to unexpected system load variation, we cannot accurately predict how much minimum charging time is required and increases the safety timer value properly.

Charge Termination Issue

During constant-voltage phase, battery termination is made when the battery taper current is below 10 percent of fast-charge current. It does not occur if the system load is always larger than the taper current threshold even though the effective battery charge current I_{BAT} is below the taper current threshold. Therefore, the battery is never terminated in this case.

All these problems are caused by the interaction between the battery and system. There must be an independent battery charge control while the system current does flow through the battery charger.

Dynamic Power Path Management (DPPM) Battery Charger

Figure 3 shows a simplified power path management battery charger block diagram. When the AC adapter is plugged in, MOSFET Q1 is used to pre-regulate the system bus voltage V_{OUT}, which is higher than the maximum battery regulation voltage V_{BAT}. This establishes a direct path from the input to the system. The MOSFET Q2 is dedicated to fully controlling the

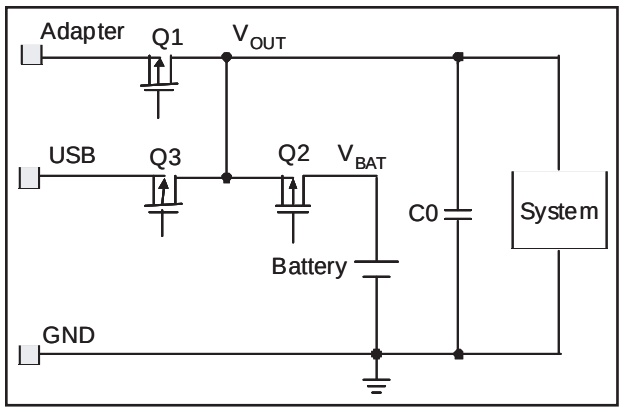

Figure 3. Simplified power path management battery charger block diagram

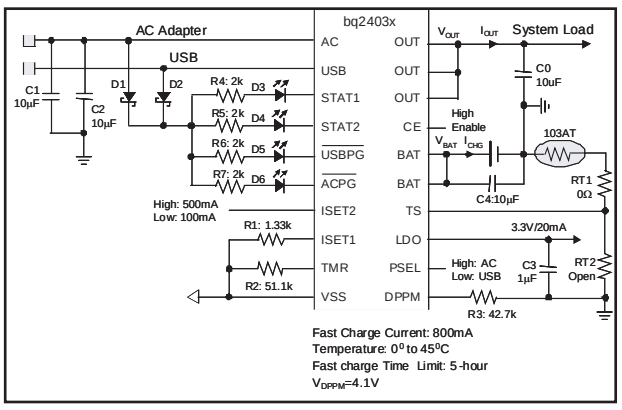

Figure 4. Dynamic power path management battery charger schematic

battery charger. Therefore, there is no battery and system interaction anymore. Similarly, when USB is present, Q3 and Q2 are used to regulate the system bus voltage and control the battery charging, respectively. This power architecture establishes two separate paths for system power and battery charging, called Power Path Management (PPM). This completely eliminates the false safety timer warning and charge termination issue. It also allows the system operation, while charging the deeply discharged battery since the system bus voltage is regulated to a set value such as 4.4 V for example, through MOSFET Q1 no matter with or without a battery. Applications such as smart phones, PDAs and MP3 players have the requirements that the user can operate the device from the input source with or without a battery. This requires PPM.

Dynamic power path management (DPPM) monitors the system bus voltage for input power loss due to brown outs, current limiting or input supply removal. If the system bus voltage drops to a pre-set value, due to a limited amount of input current from the AC adapter or USB, the battery charging current is reduced until the output voltage stops dropping. The DPPM control tries to reach a steady-state condition where the system gets its needed current and the battery is charged with the remaining current. This allows the user to use a smaller power rating and cheaper AC adapter while supplying system power and charging the battery simultaneously.

Figure 4 shows a Li-Ion battery charge example with DPPM technique. The DPPM pin is used to set the DPPM voltage. When the total current from the system and battery charger exceeds the AC adapter current limit or USB current limit, the capacitors connected to the system bus starts to discharge and system bus voltage begins to drop. When the system bus voltage drops to the pre-determined threshold set by DPPM pin, the charge current is reduced to maintain the system bus voltage to prevent system crash due to overloading the AC adapter. If the system bus voltage cannot be maintained even when the charge current reduces to 0 A, then the battery is going to temporarily discharge and provide power to the system to avoid a system crash. Figure 5 shows the DPPM experimental waveforms.

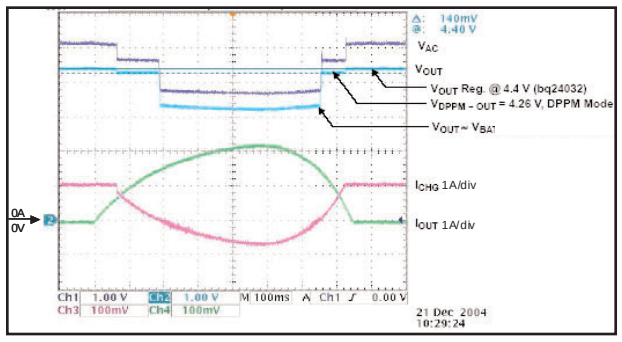

Figure 5. DPPM experimental waveforms

The DPPM voltage threshold is typically designed to be just below the regulation voltage at the OUT pin in order to safely keep the system operating. Since there are three integrated power MOSFETs in this architecture, a thermal regulation loop is used to prevent the silicon temperature to reach more than 125°C by reducing the charge current. Whenever the charge current is reduced due to the active thermal regulation or due to active DPPM, the safety timer is automatically adjusted to increase the timer value, while avoiding unexpected false safety timer expiration. Besides, the charge termination is also disabled even if the charge current is below the taper current threshold when either DPPM or thermal regulation loop is active. This approach prevents the false charge termination.

Conclusion

The most common false safety timer warning and charge termination issue are caused by the battery charger and system interaction since the battery charger is not able to monitor and control the effective charge current when the system is directly connected to the battery. The DPPM is able to completely eliminate these issues by providing independent power paths from the input power source to the system and the battery. It is able to operate the system while charging the deeply discharged or defective battery simultaneously. The DPPM enables the end user to prevent system crash when overloading the AC adapter by reducing the battery charge current.

Jinrong Qian is an application engineering manager and senior member of technical staff for the portable power battery management group at Texas Instruments. He has published more than 30 peer-reviewed power electronics journal and conference papers and holds 19 US patents. Dr. Qian's primary research interests include high-efficiency power converter topologies, portable power supply design and battery power management ICs and their applications.

Contact Texas Instruments at www.ti.com.

Reprinted from the March/April 2006 issue of *Battery Power Products & Technology* magazine. ©2006 Webcom Communications Corp.
7355 E. Orchard Rd., Ste. 100, Greenwood Village, CO 80111 USA Phone 720-528-3770. Fax 720-528-3771. wwwinfowebcom.com